Standard Series

LFP1270 *12V70Ah*

FirstPower®

Dimension

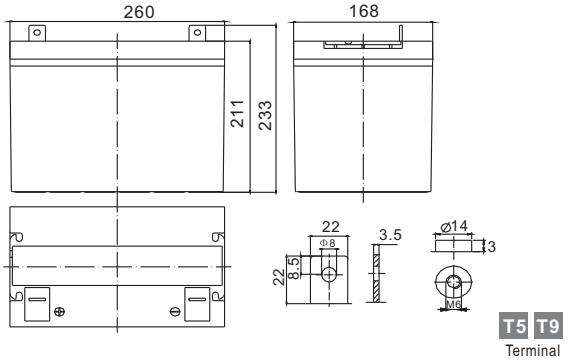

Specification

Nominal Voltage		12 V
Capacity(10HR, 25℃)		70Ah
Dimension	Length	260mm (10.2inch)
	Width	168mm (6.6inch)
	Height	211mm (8.3inch)
	Total Height(T5/T9)	233mm (9.2inch)/214mm (8.4inch)
Approx. Weight		22.2kg (49.0lbs)

Characteristics

Capacity 20℃ (68□) To 1.70V/Cell	20 hour rate	74Ah
	10 hour rate	70Ah
	5 hour rate	63Ah
	1 hour rate	42.3Ah
	15 min rate	27.8Ah
Internal resistance(Fully charged, 25℃)		Approx.5.5mΩ
Capacity affected by temperature (10HR)	40℃	102%
	25℃	100%
	0℃	85%
	-15℃	65%
Self-discharge (25℃)	3 month	Remaining Capacity: 91%
	6 month	Remaining Capacity: 82%
	12 month	Remaining Capacity: 65%
Nominal operating temperature		25℃ ±3℃(77℉ ±5℉)
Operating temperature range		-15℃~50℃(5℉~122℉)
Float charging voltage(25℃)		13.50 to 13.80V
Cyclic charging voltage(25℃)		14.50 to 14.90V
Maximum charging current		21A
Terminal material		Copper
Maximum discharge current		700A(5 Sec.)

The Relationship for Open Circuit Voltage and Residual Capacity (25°C)

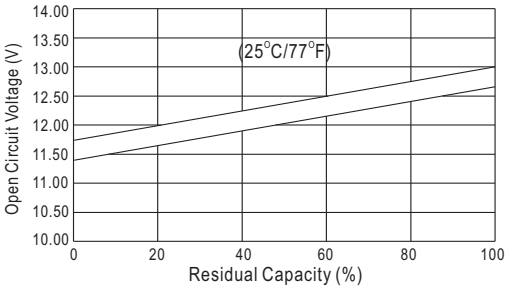

Charging Characteristics(25°C)

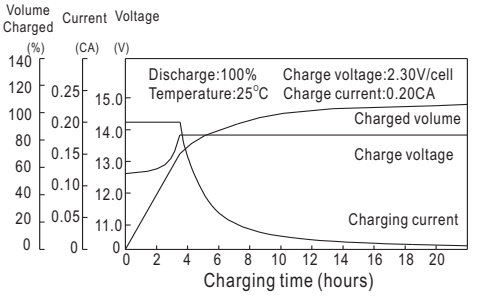

Cycle Life(25°C)

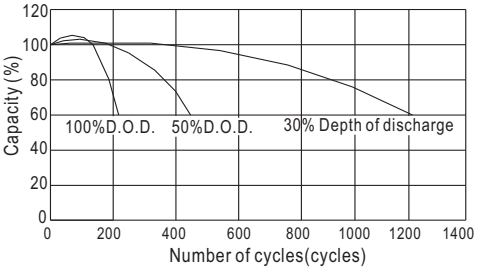

Constant Current Discharge Characteristics (A, 25°C)

F.V/TIME	5min	10min	15min	30min	60min	3h	5h	10h	20h
9.60V	221	147	116	72.8	44.1	18.1	12.8	7.11	3.73
10.2V	209	140	111	69.9	42.3	17.9	12.6	7.04	3.70
10.8V	197	131	105	66.4	40.2	17.5	12.3	7.00	3.68

Constant Power Discharge Characteristics (Watt, 25°C)

5min	10min	15min	30min	60min	3h	5h	10h	20h
2315	1588	1268	817	503	213	151	84.8	44.8
2199	1508	1217	784	483	210	149	84.1	44.4
2068	1418	1157	745	458	206	146	84.1	44.1